kolpa-san®
by kolpa

SPLOŠNO NAVODILO ZA MONTAŽO PODNOŽJA

OPĆE UPUTSTVO ZA MONTAŽU POSTOLJA

Nr.MK 19

UNIVERZALNI MONTAŽNI SET

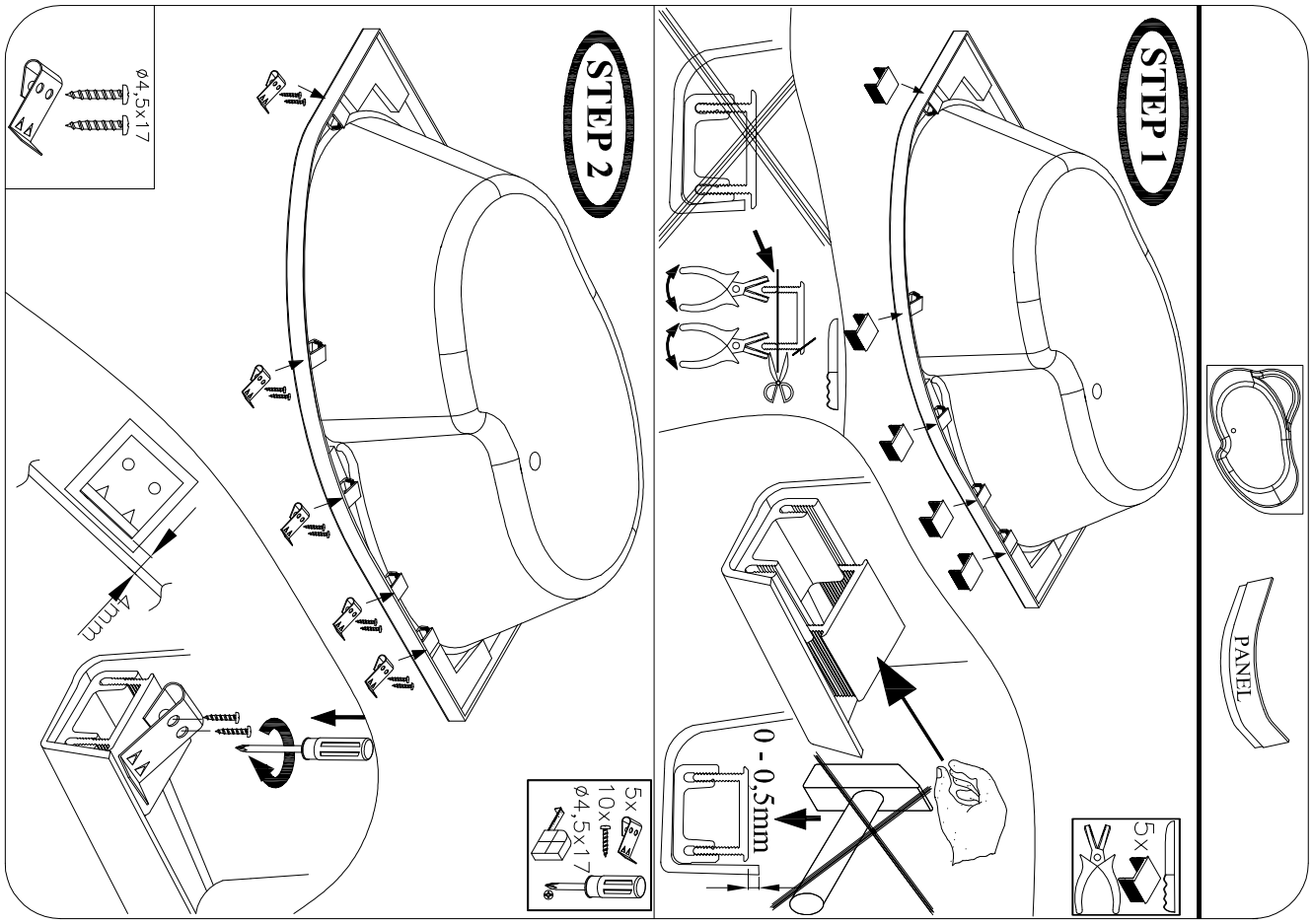

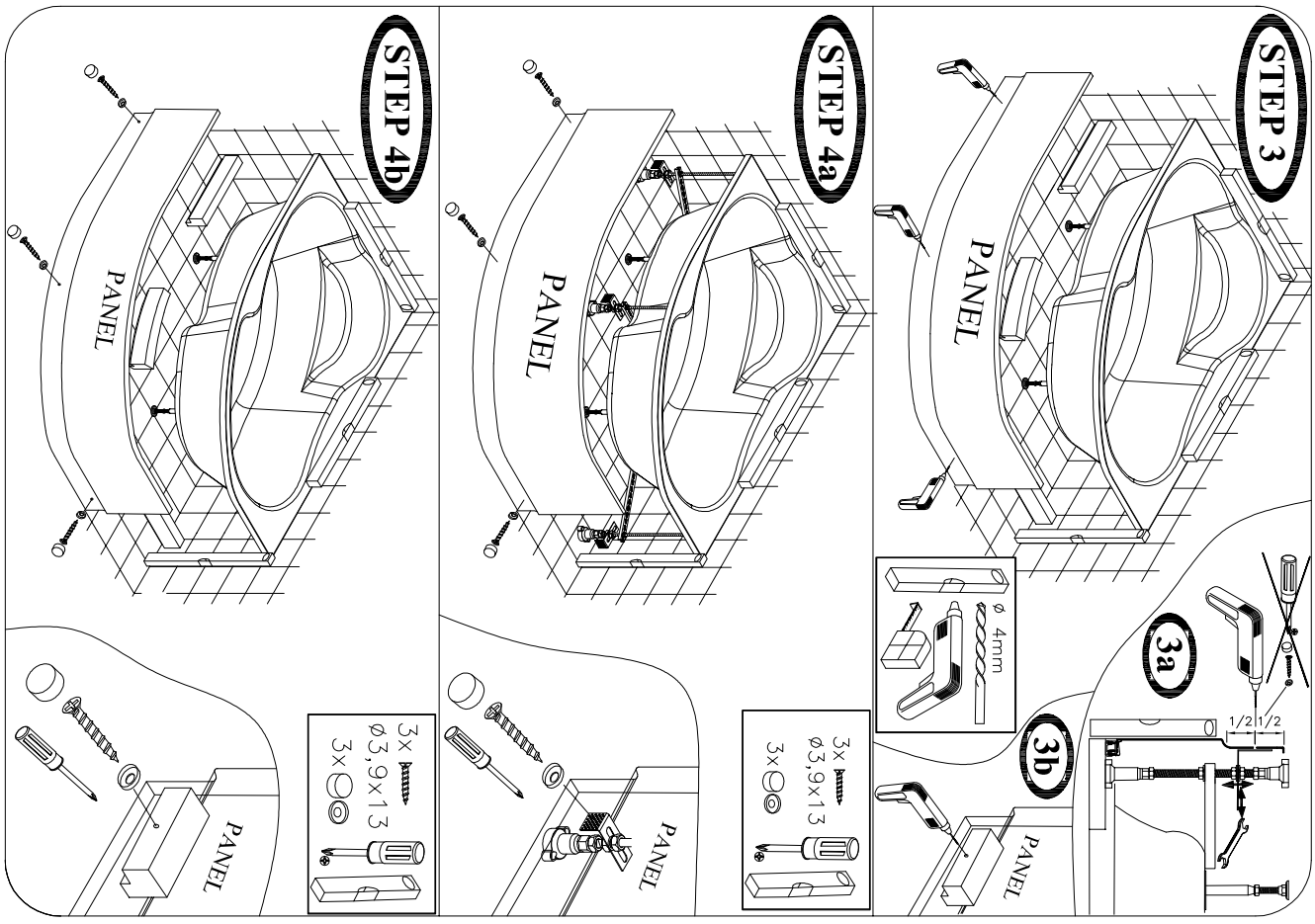

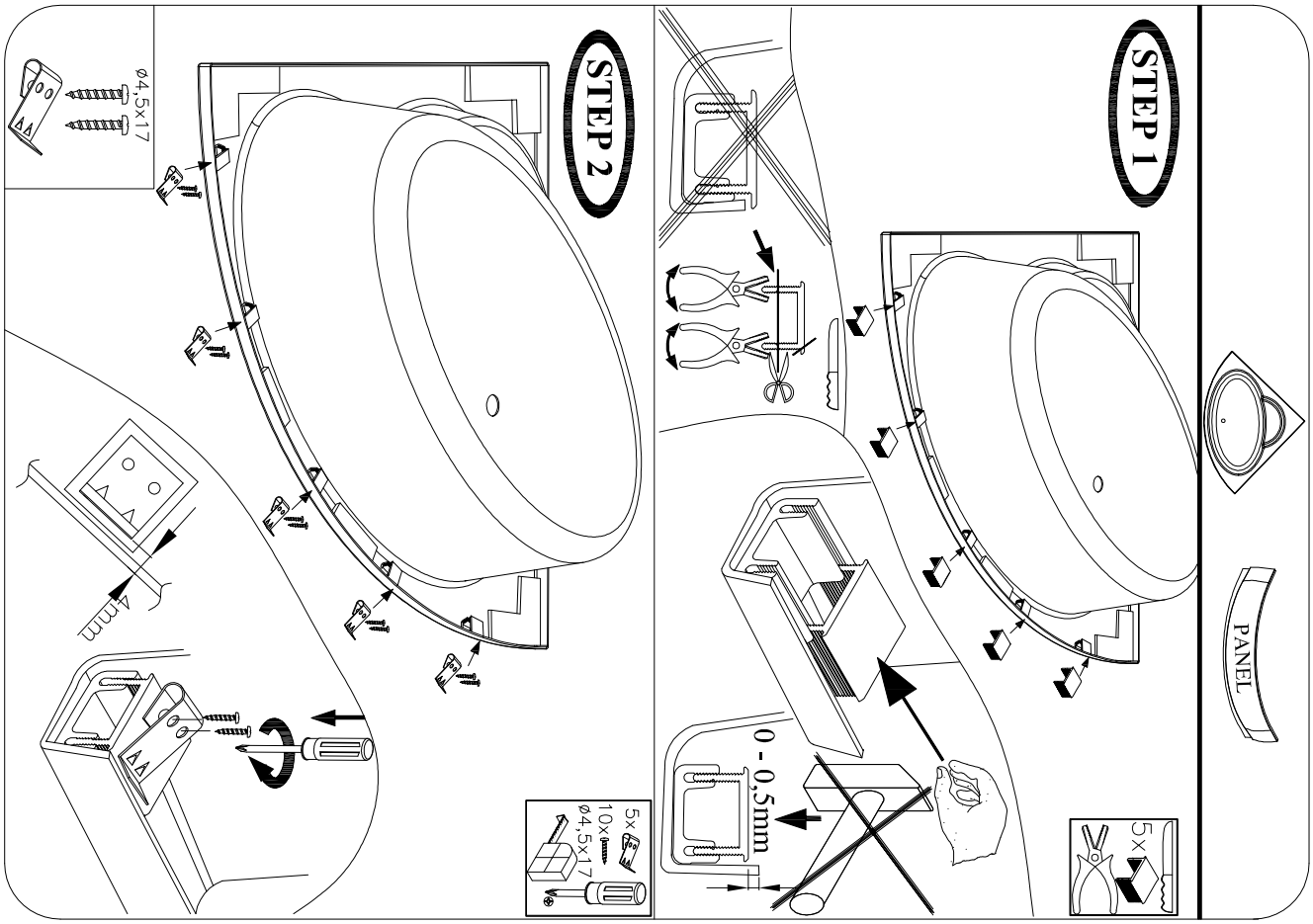
STEP 1
PANEL
5x
0 - 0,5mm
STEP 2
ø4,5x17
5x
10x
ø4,5x17

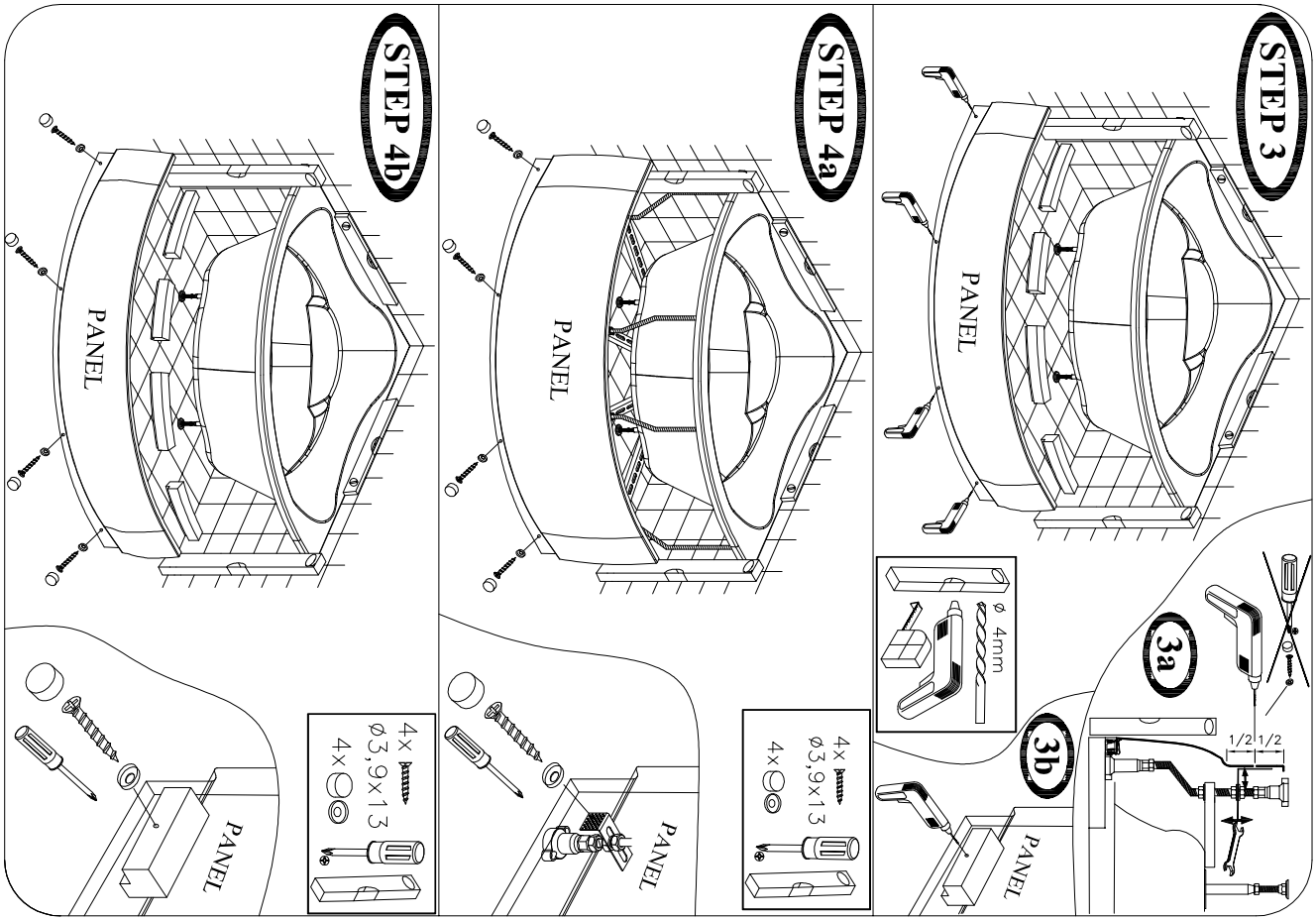
STEP 3
PANEL
3a
3b
ø 4mm
1/2 1/2
PANEL
STEP 4a
PANEL
4x
ø3,9x13
4x
PANEL
STEP 4b
PANEL
4x
ø3,9x13
4x
PANEL

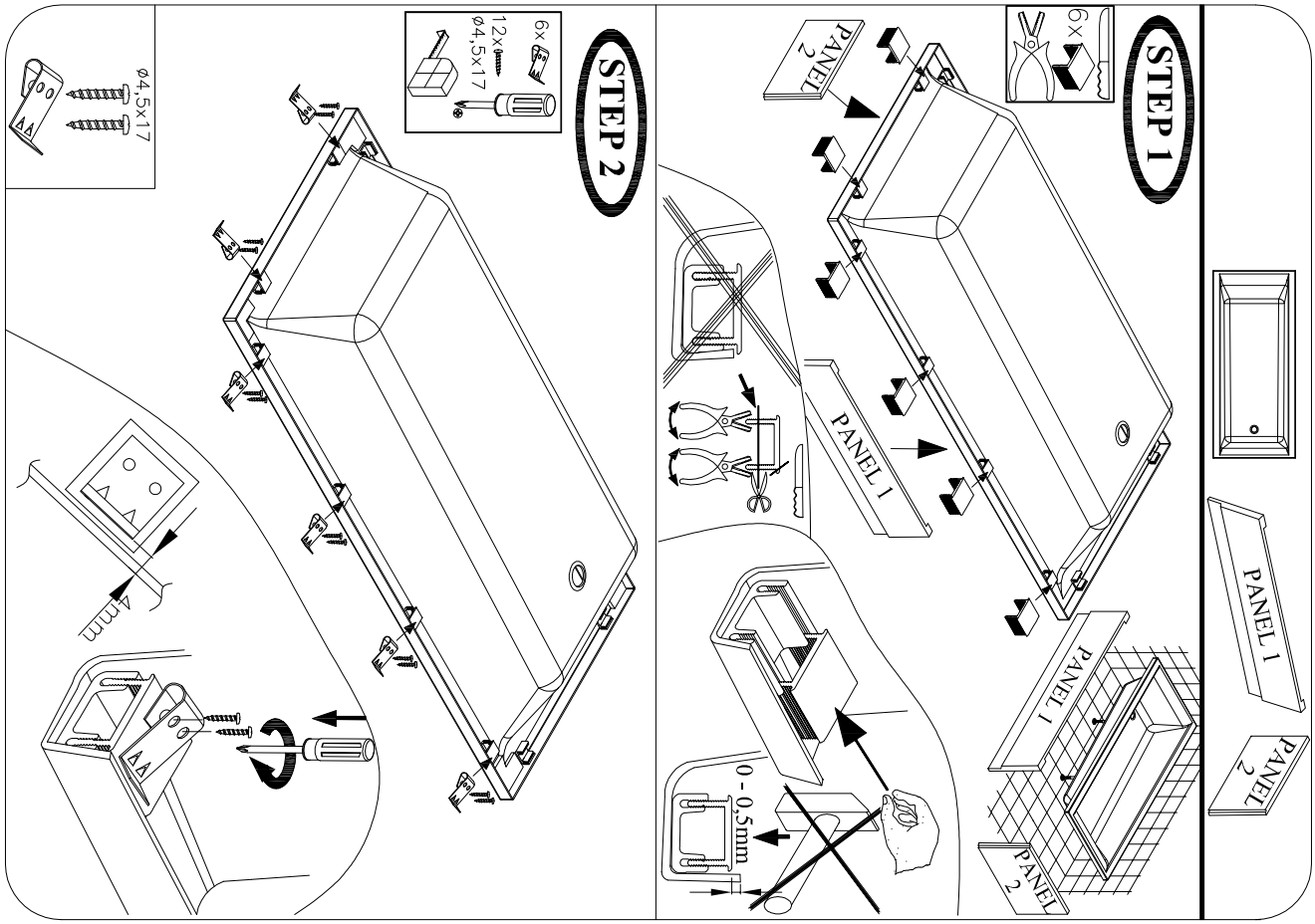
PANEL 1
PANEL 2
STEP 1
6x
PANEL 1
PANEL 2
PANEL 1
PANEL 2
0 - 0,5mm
STEP 2
6x
12x
ø4,5x17
ø4,5x17

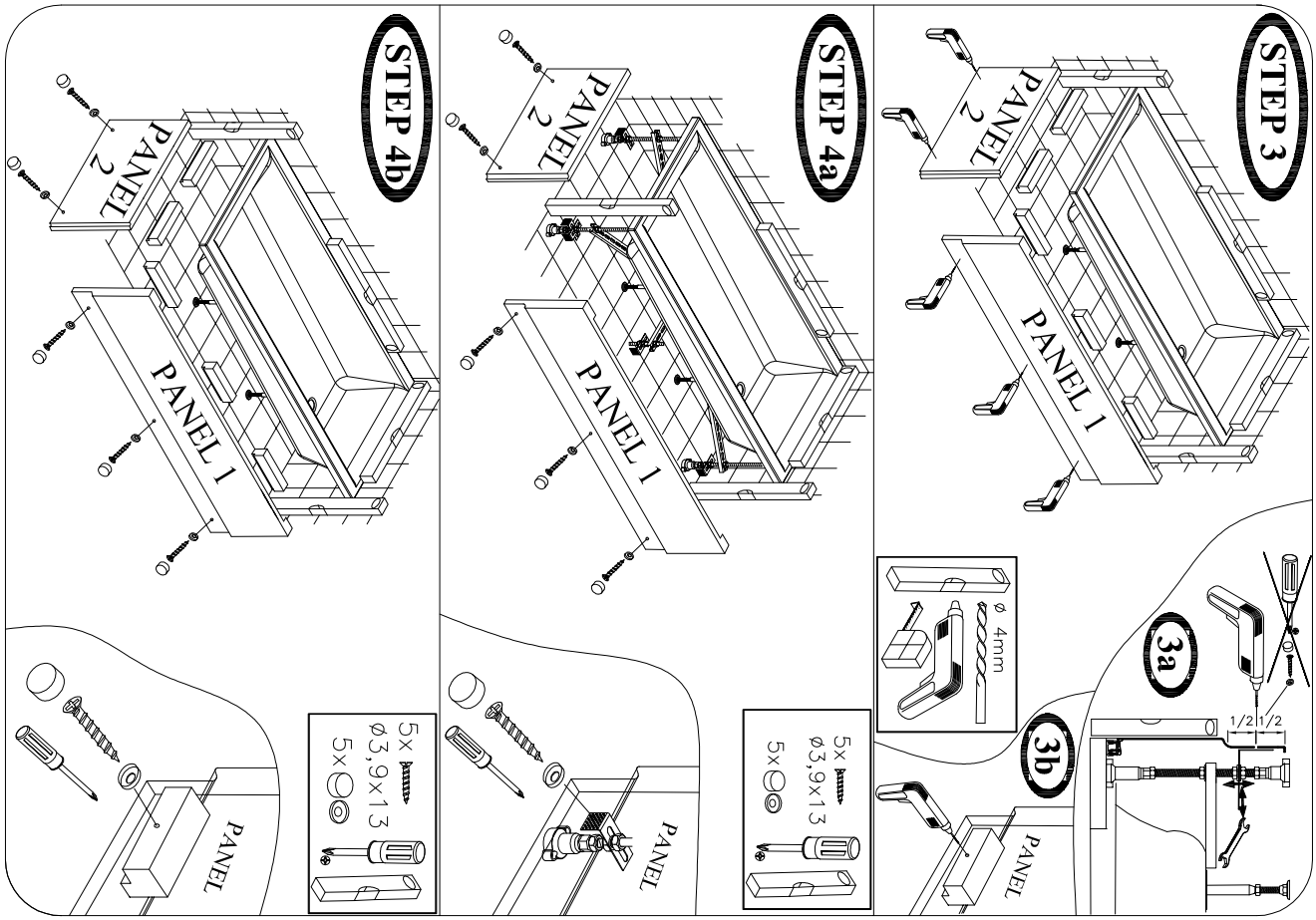
STEP 3
PANEL 2
PANEL 1
3a
1/2 1/2
3b
ø 4mm
PANEL
5x
ø3,9x13
5x
STEP 4a
PANEL 2
PANEL 1
PANEL
5x
ø3,9x13
5x
STEP 4b
PANEL 2
PANEL 1
PANEL
5x
ø3,9x13
5x

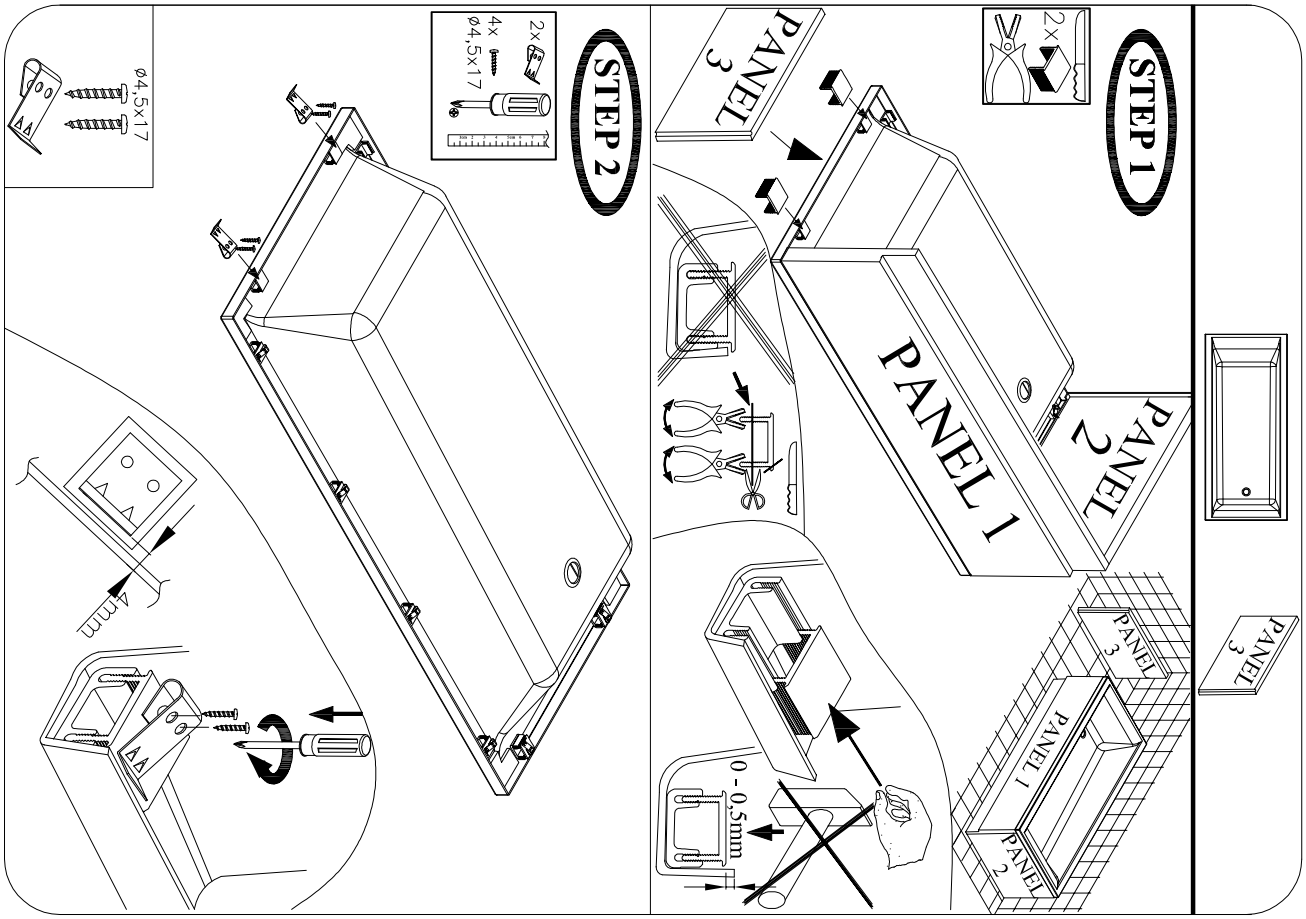
STEP 1
2x
PANEL 1
PANEL 2
PANEL 3
0 - 0,5mm
STEP 2
2x
4x
ø4,5x17
ø4,5x17
4mm

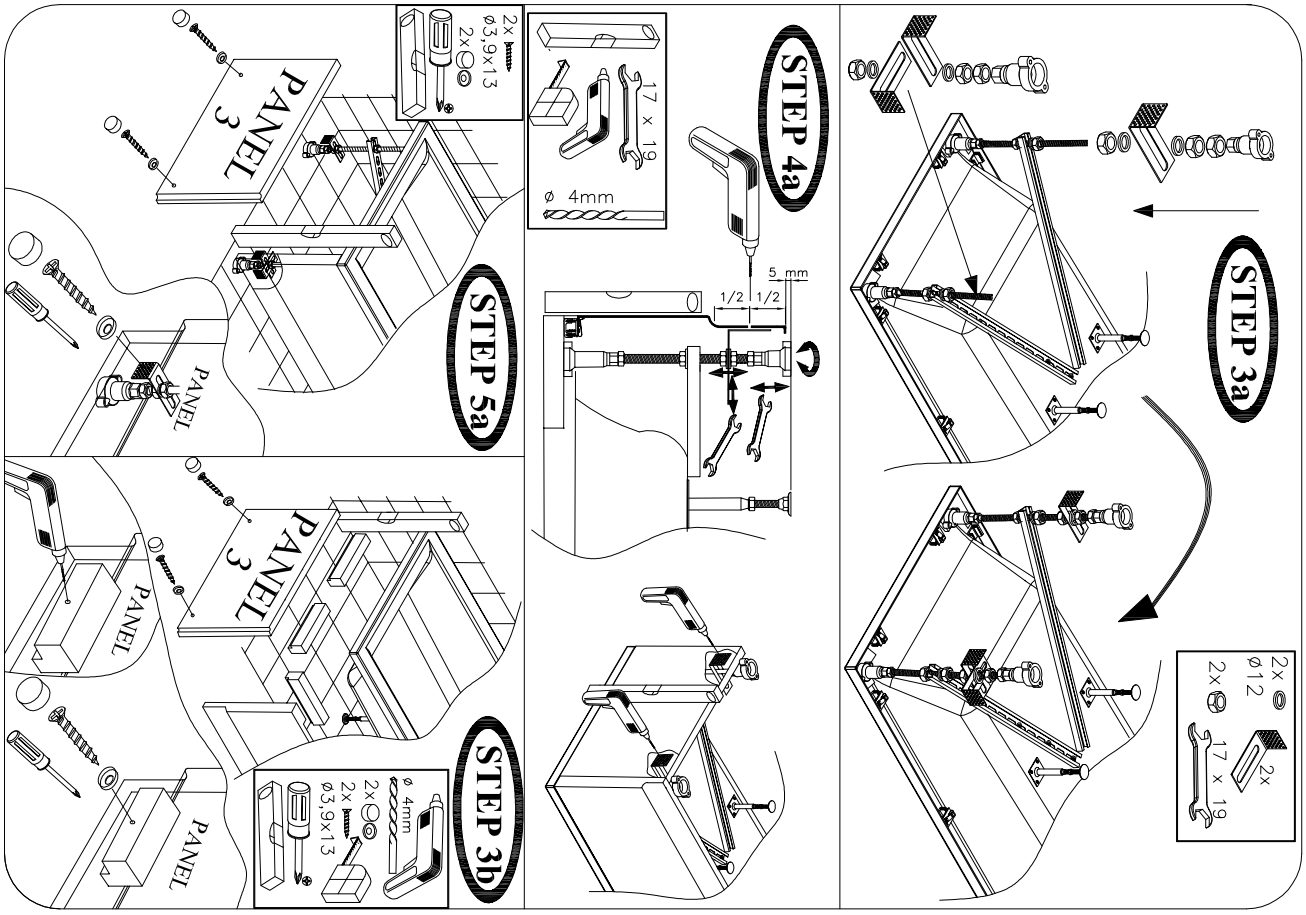
STEP 3a
2x
ø12
2x
2x
17 x 19
STEP 4a
5 mm
1/2 1/2
17 x 19
ø 4mm
STEP 5a
2x
ø3,9x13
2x
PANEL 3
PANEL
STEP 3b
ø 4mm
2x
2x
ø3,9x13
PANEL 3
PANEL
PANEL